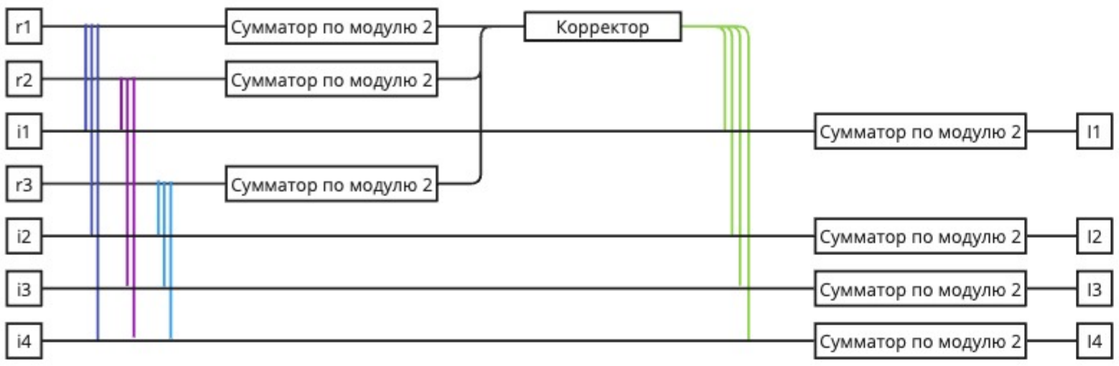

r1	r2	i1	r3	i2	i3	i4	s
1	0	1	0	1	0	1	s1
0	1	1	0	0	1	1	s2
0	0	0	1	1	1	1	s3

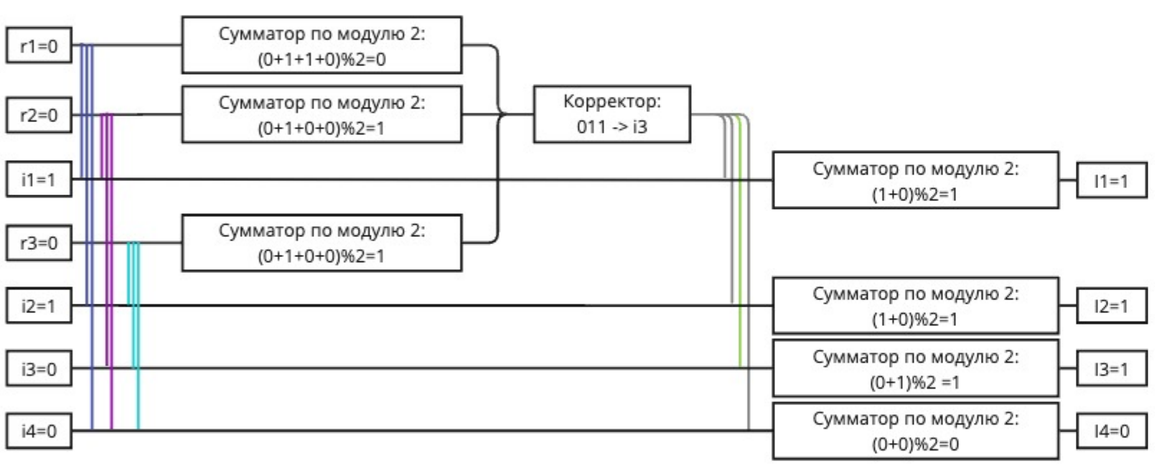

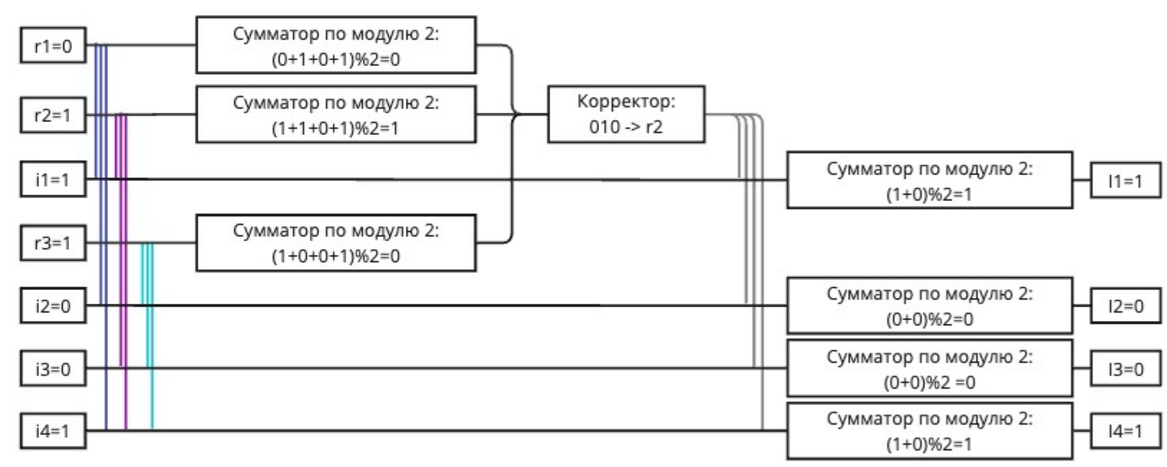

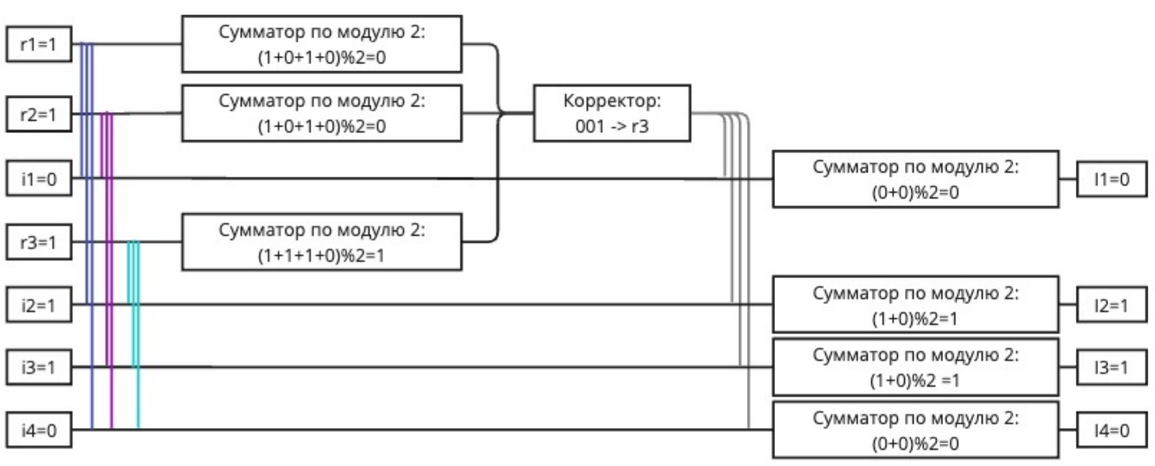

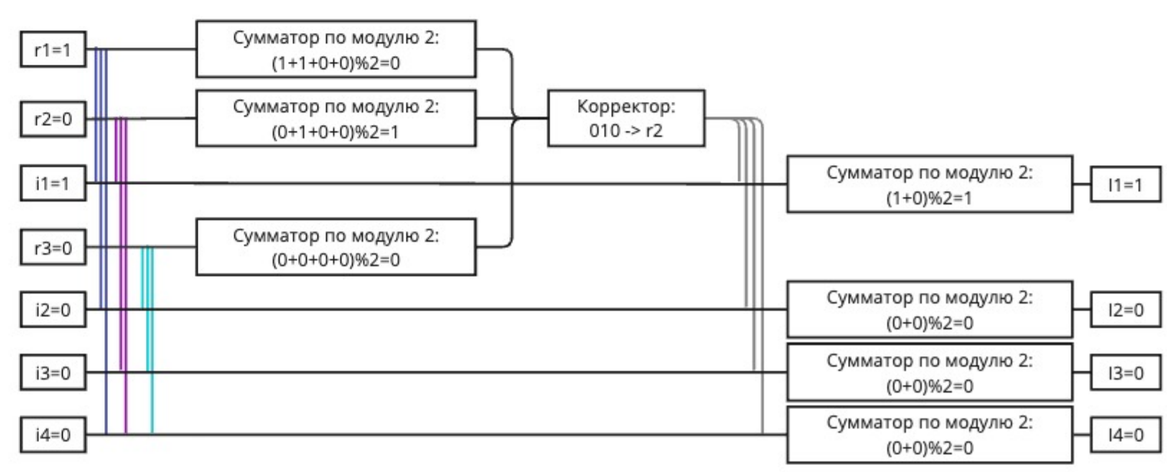

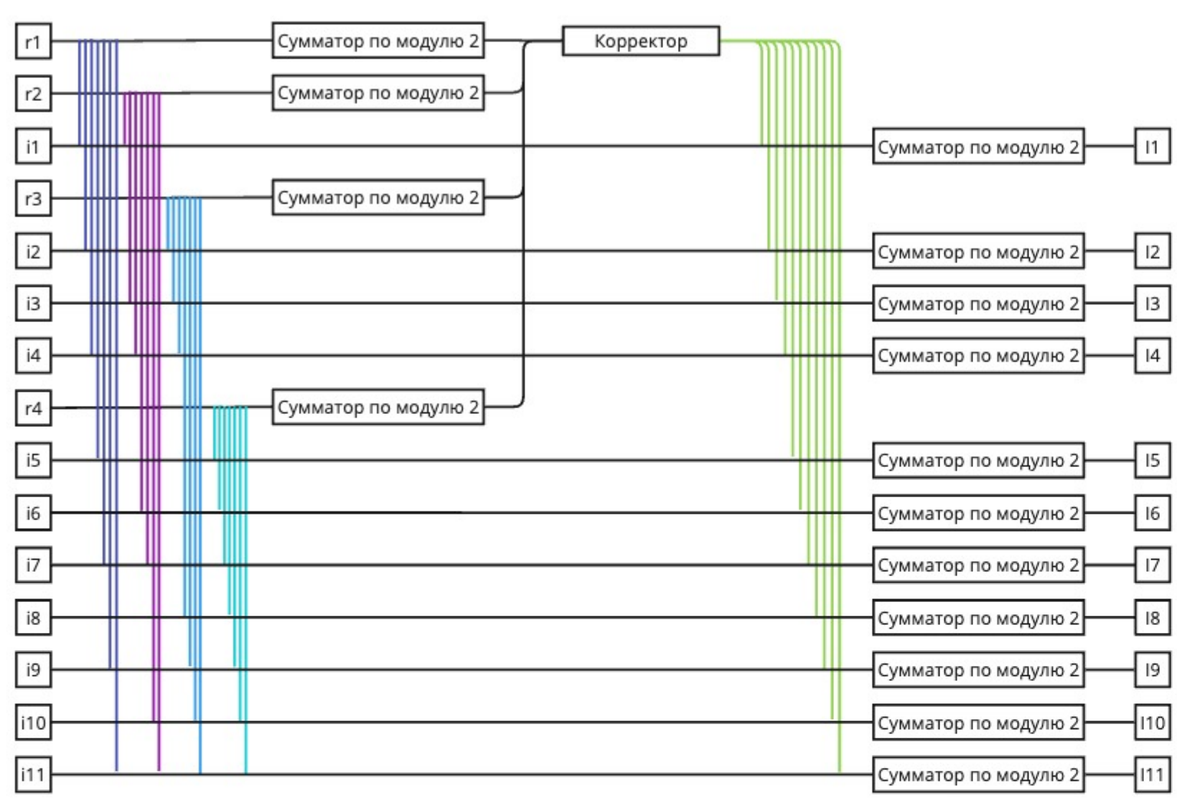

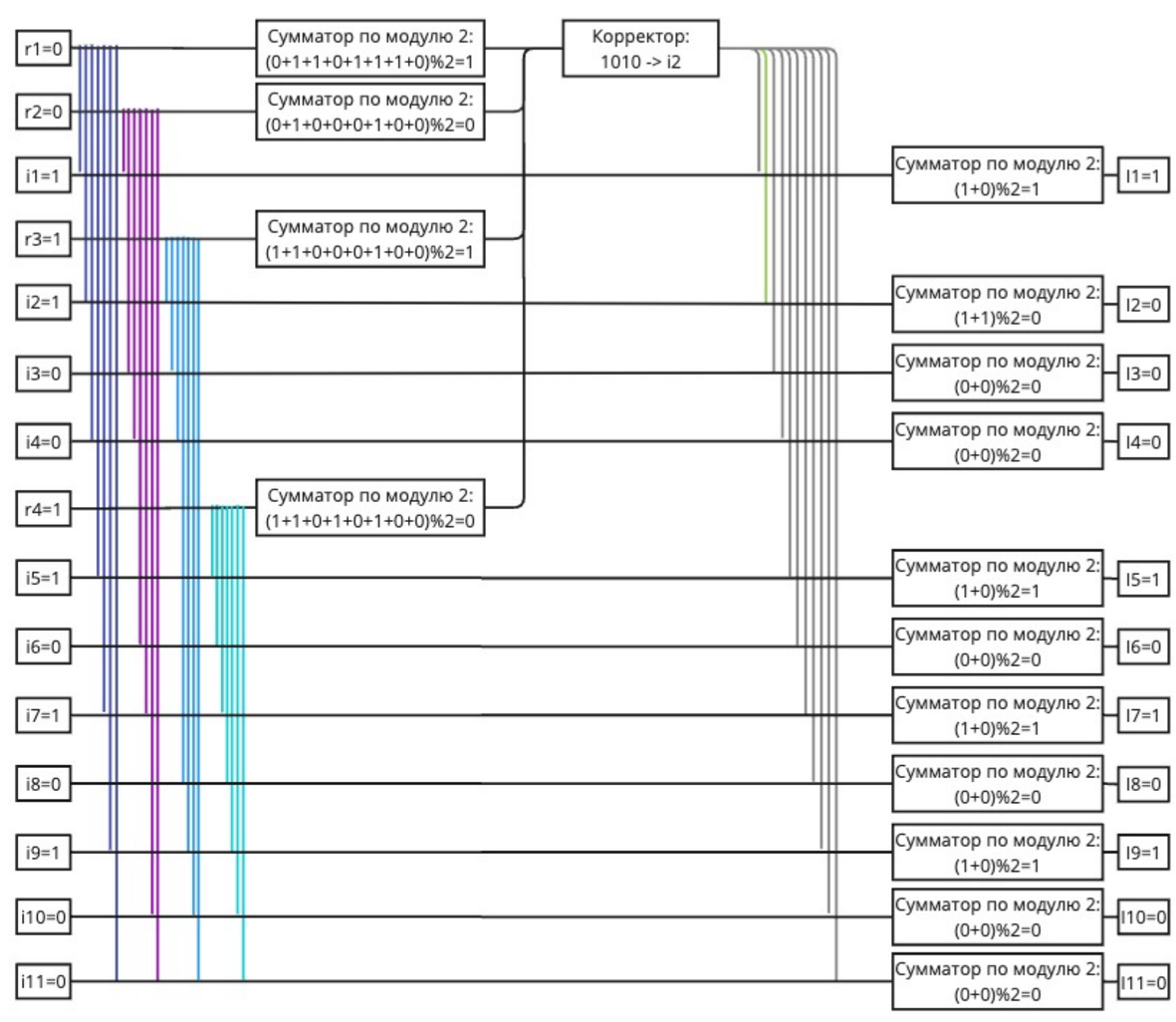

r1	r2	i1	r3	i2	i3	i4	r5	i5	i6	i7	i8	i9	i10	i11	S
1	0	1	0	1	0	1	0	1	0	1	0	1	0	1	s1
0	1	1	0	0	1	1	0	0	1	1	0	0	1	1	s2
0	0	0	1	1	1	1	0	0	0	0	1	1	1	1	s3
0	0	0	0	0	0	0	1	1	1	1	1	1	1	1	s4